Edition 04.2018

SYNERGY
SCAFFOLDING AND ACCESS SERVICES

SYNERGY SCAFFOLDING AND ACCESS SERVICES

Synergy Scaffolding is a privately owned Australian company, dedicated to comprehensive service and keeping our customers happy.

WE'RE THE LEADING SUPPLIERS

Kwikally 2.0m Stretcher Stair Access Loop Assembly

CATALOGUE

263 Milperra Rd, Revesby NSW 2212

51 Suscatand St, Rocklea QLD 4106

2/10 Chullora Bend, Jandakot WA 6164

synergyaccessandscaffolding.com.au

1/1364 Heatherton Rd, Dandenong VIC 3175

19 Watervale Dr, Green Fields SA 5107

1300 796 305

sales@ssaas.com.au

SYNERGY
SCAFFOLDING AND ACCESS SERVICES

SYNERGY CATALOGUE LIST

Stretcher Stair Access

Product	Page No.
KA-STRETCH-LP2.0M	2
KA-STRETCH-LP4.0M	3
KA-STRETCH-LP6.0M	4
KA-STRETCH-LP8.0M	5
KA-STRETCH-LP10.0M	6
KA-STRETCH-LP12.0M	7
KA-STRETCH-LP14.0M	8
KA-STRETCH-LP16.0M	9
KA-STRETCH-LP18.0M	10
KA-STRETCH-LP20.0M	11

These Ledgers "KA-1.3L" needs to be lifted up 1 star where erection is completed before use.

SYNERGY
SCAFFOLDING AND ACCESS SERVICES

ALUMINIUM KWIKALLY

Kwikally 2.0m Stretcher Stair Access Loop Assembly (2.0m High)

KA-STRETCH-LP2.0M

This stretcher stair access can be used for scaffolds ranging from 2.0 - 2.5m

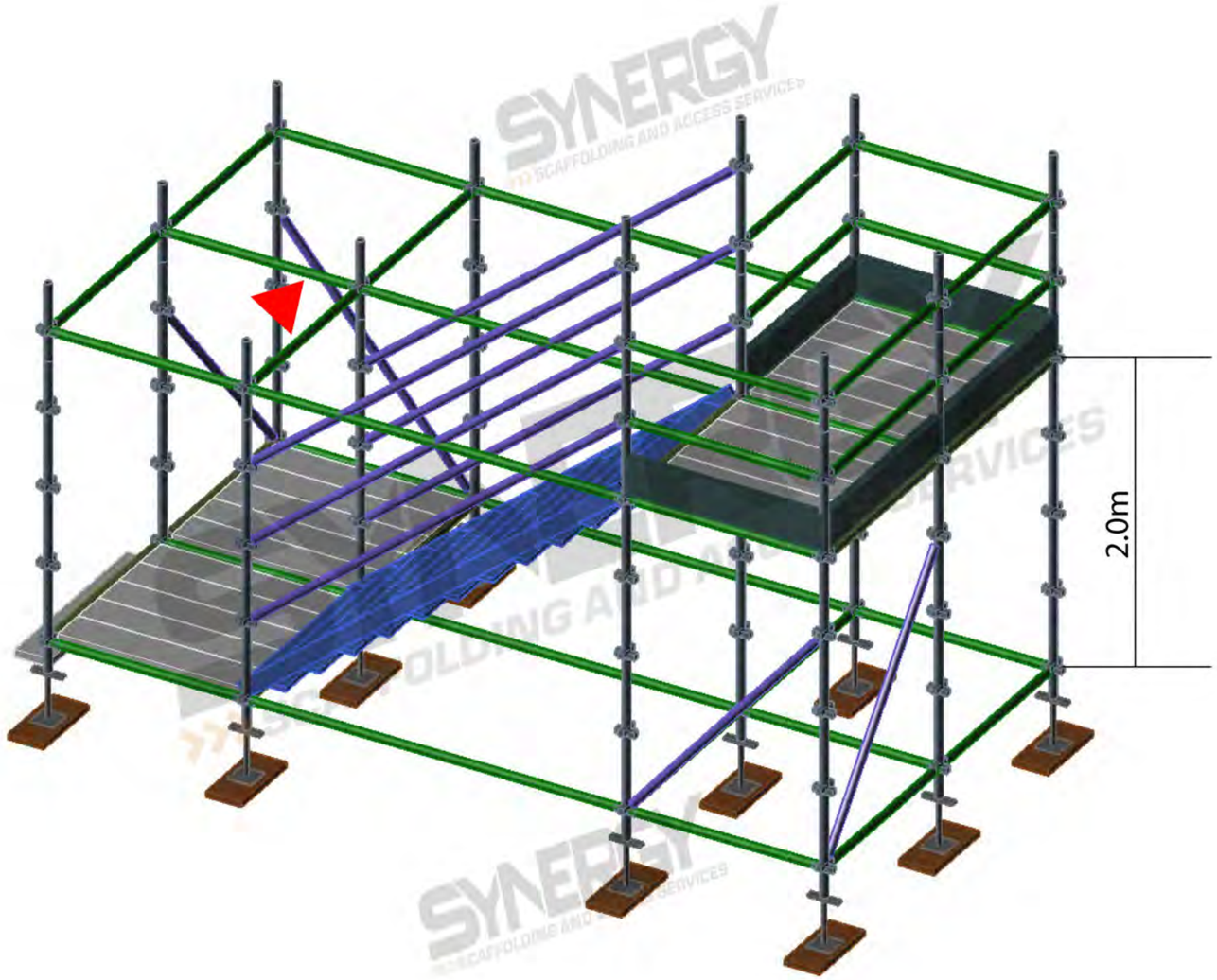

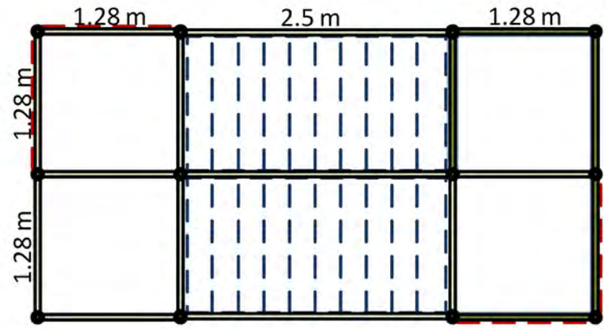

Part No.	Description	Qty
KA-ASS2.0	Stretcher Stair 2.0m	2
KA-2.0DB	Diagonal Brace 2.0m	4
KA-3.2DB	Diagonal Brace 3.2m	6
KA-TBC	Toe Board Clips	6
KA-1.3L	Ledger 1.3m	38
KA-2.5L	Ledger 2.5m	6
TSB-5001.1	Timber Sole Boards	12
KA-1.3x0.6PH	1280*600mm Hatch	8
KA-1.3TB	1280mm Toe Board	5
KA-0.5S	Standard 0.5m	10
KA-1.0S	Standard 1.0m	2
KA-2.0S	Standard 2.0m	6
KA-3.0S	Standard 3.0m	6
SBJ	Solid Base Jack	12

Total items Weight: 510kg

These Ledgers "KA-1.3L" needs to be lifted up 1 star where erection is completed before use.

SYNERGY
SCAFFOLDING AND ACCESS SERVICES

ALUMINIUM KWIKALLY

Kwikally 2.0m Stretcher Stair Access Loop Assembly (4.0m High)

KA-STRETCH-LP4.0M

This stretcher stair access can be used for scaffolds ranging from 4.0 - 4.5m

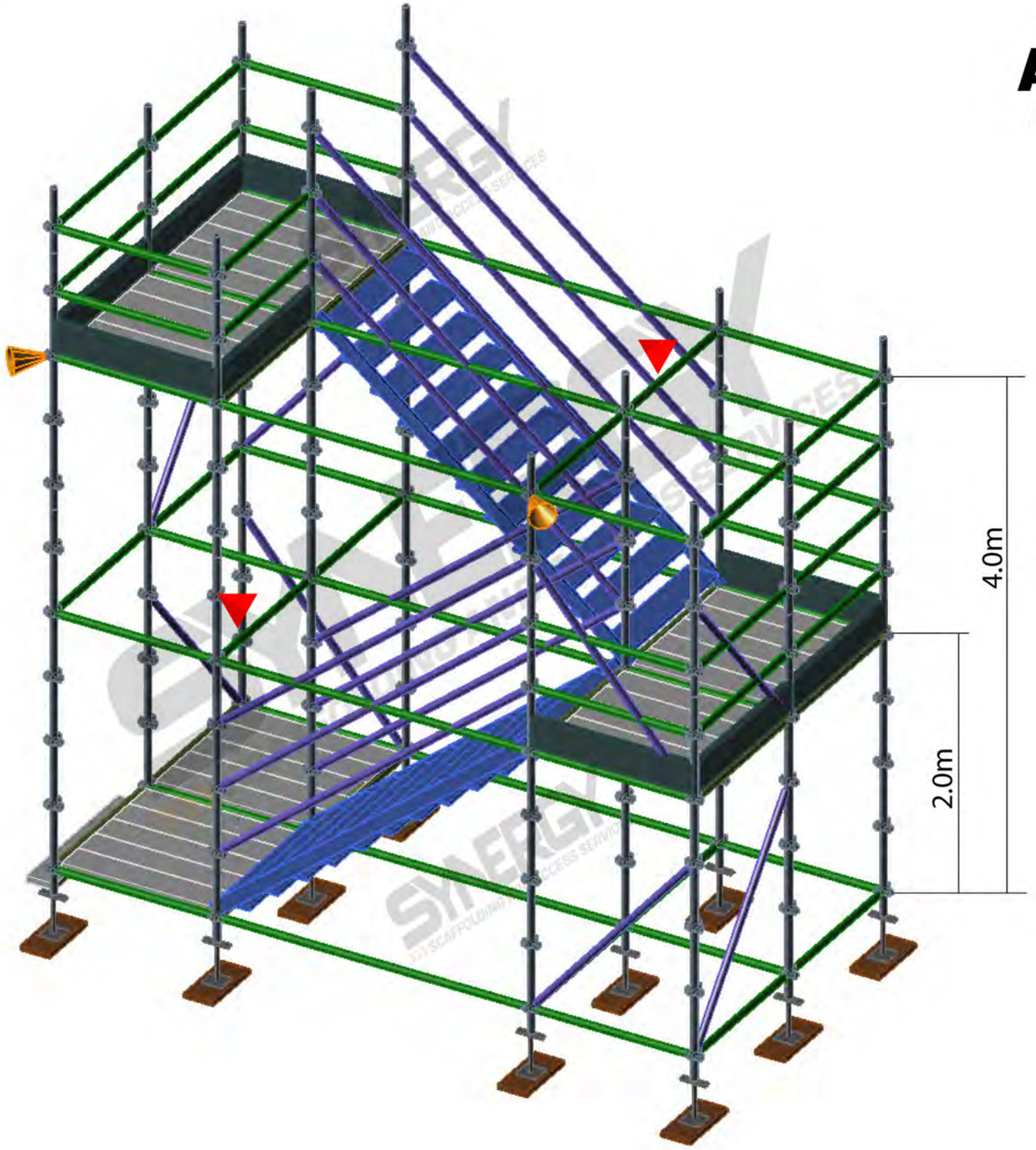

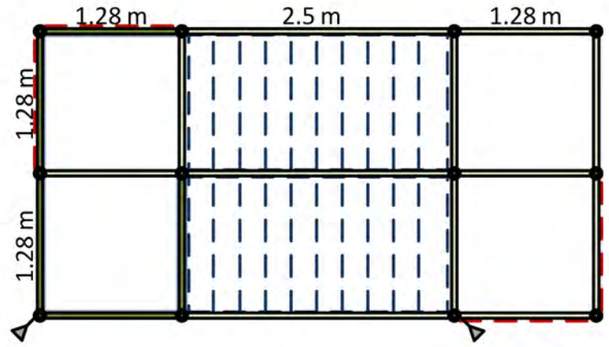

Part No.	Description	Qty
KA-ASS2.0	Stretcher Stair 2.0m	4
KA-2.0DB	Diagonal Brace 2.0m	8
KA-3.2DB	Diagonal Brace 3.2m	12
KA-TBC	Toe Board Clips	11
KA-1.3L	Ledger 1.3m	62
KA-2.5L	Ledger 2.5m	9
TSB-5001.1	Timber Sole Boards	12
KA-1.3x0.6PH	1280*600mm Hatch	12
KA-1.3TB	1280mm Toe Board	9
KA-0.5S	Standard 0.5m	10
KA-1.0S	Standard 1.0m	6
KA-2.0S	Standard 2.0m	4
KA-3.0S	Standard 3.0m	14
SBJ	Solid Base Jack	12
WBR	Wall Bracket	2.0
DC	Doubles (90'z)	2.0
600TUBE	600 Tube	2.0

Total items Weight: 785kg

These Ledgers "KA-1.3L" needs to be lifted up 1 star where erection is completed before use.

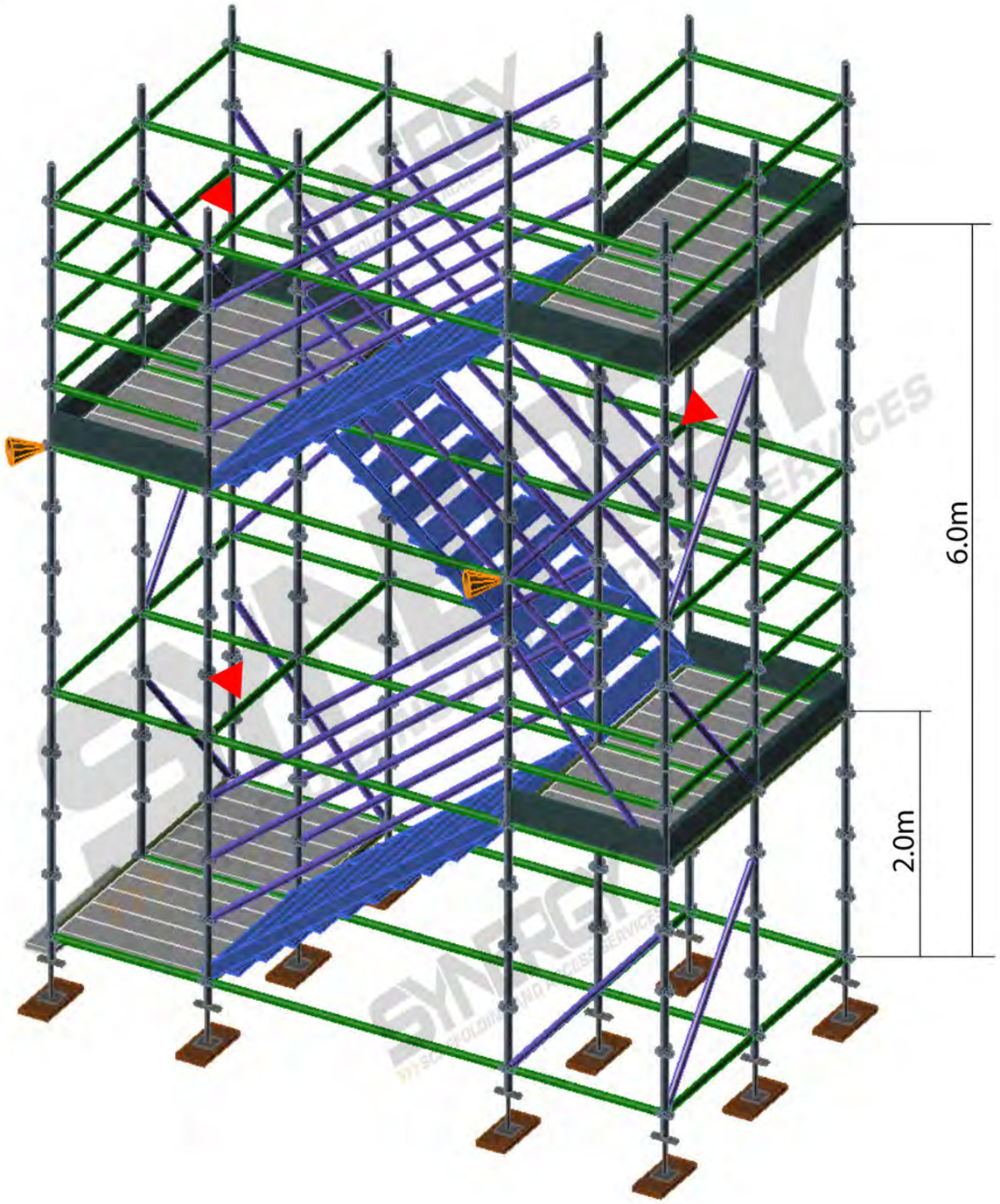

SYNERGY
SCAFFOLDING AND ACCESS SERVICES

ALUMINIUM KWIKALLY

Kwikally 2.0m Stretcher Stair Access Loop Assembly (6.0m High)

KA-STRETCH-LP6.0M

This stretcher stair access can be used for scaffolds ranging from 6.0 - 6.5m

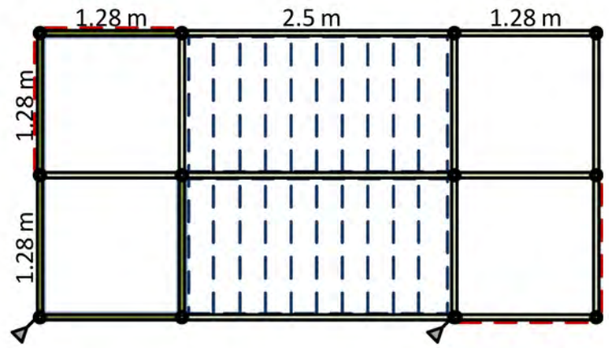

Part No.	Description	Qty
KA-ASS2.0	Stretcher Stair 2.0m	6
KA-2.0DB	Diagonal Brace 2.0m	12
KA-3.2DB	Diagonal Brace 3.2m	18
KA-TBC	Toe Board Clips	16
KA-1.3L	Ledger 1.3m	86
KA-2.5L	Ledger 2.5m	12
TSB-5001.1	Timber Sole Boards	12
KA-1.3x0.6PH	1280*600mm Hatch	16
KA-1.3TB	1280mm Toe Board	13
KA-0.5S	Standard 0.5m	10
KA-1.0S	Standard 1.0m	4
KA-2.0S	Standard 2.0m	2
KA-3.0S	Standard 3.0m	24
SBJ	Solid Base Jack	12
WBR	Wall Bracket	2.0
DC	Doubles (90'z)	2.0
600TUBE	600 Tube	2.0

Total items Weight: 1045kg

These Ledgers "KA-1.3L" needs to be lifted up 1 star where erection is completed before use.

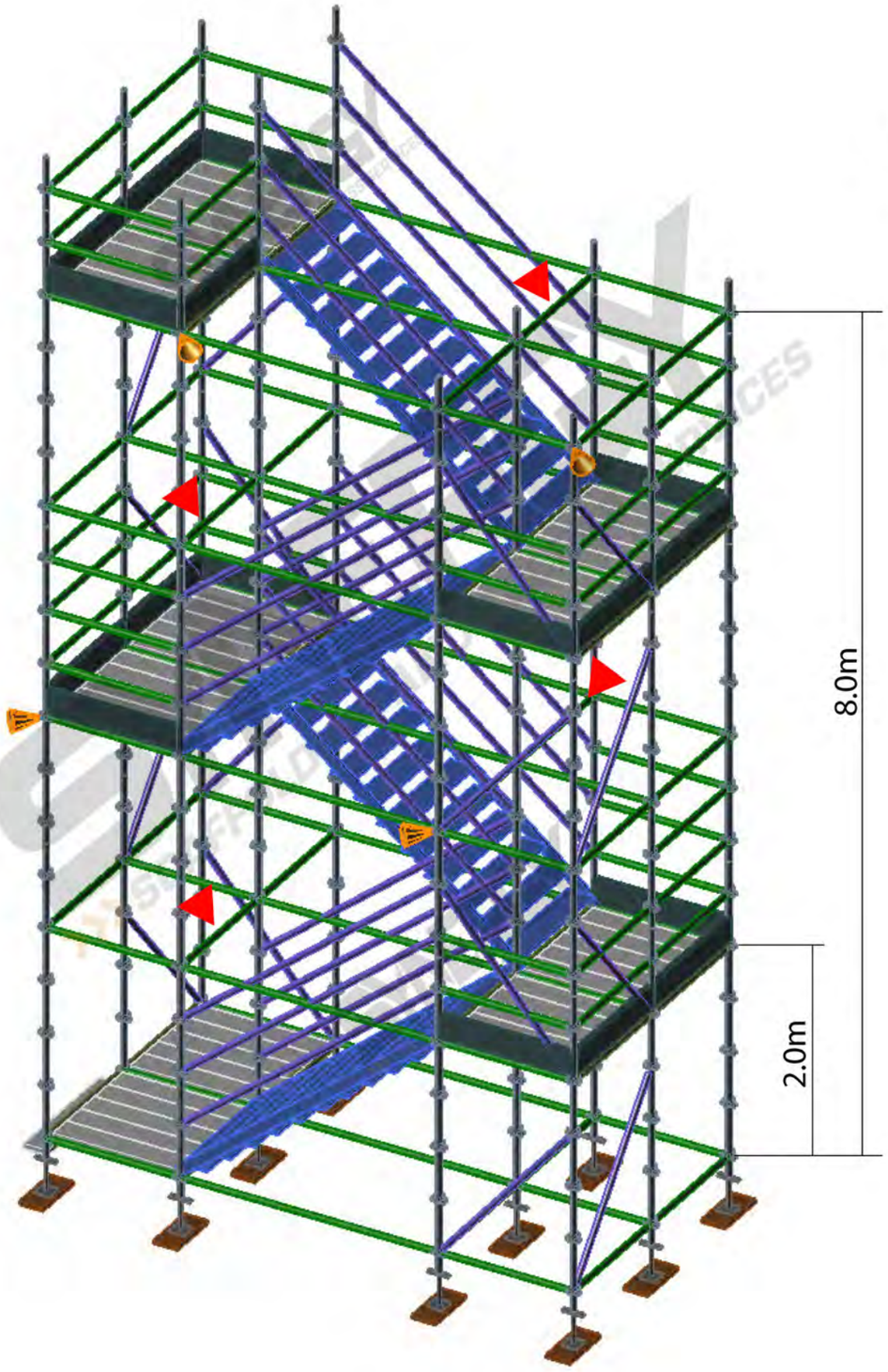

SYNERGY
SCAFFOLDING AND ACCESS SERVICES

ALUMINIUM KWIKALLY

Kwikally 2.0m Stretcher Stair Access Loop Assembly (8.0m High)

KA-STRETCH-LP8.0M

This stretcher stair access can be used for scaffolds ranging from 8.0 - 8.5m

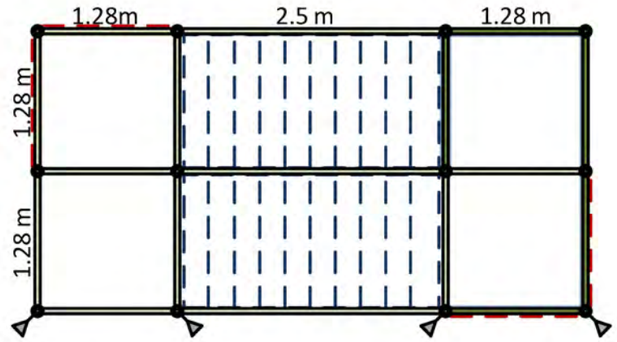

Part No.	Description	Qty
KA-ASS2.0	Stretcher Stair 2.0m	8
KA-2.0DB	Diagonal Brace 2.0m	16
KA-3.2DB	Diagonal Brace 3.2m	24
KA-TBC	Toe Board Clips	21
KA-1.3L	Ledger 1.3m	110
KA-2.5L	Ledger 2.5m	15
TSB-5001.1	Timber Sole Boards	12
KA-1.3x0.6PH	1280*600mm Hatch	20
KA-1.3TB	1280mm Toe Board	17
KA-0.5S	Standard 0.5m	10
KA-1.0S	Standard 1.0m	2
KA-2.0S	Standard 2.0m	6
KA-3.0S	Standard 3.0m	30
SBJ	Solid Base Jack	12
WBR	Wall Bracket	4.0
DC	Doubles (90'z)	4.0
600TUBE	600 Tube	4.0

Total items Weight: 1315kg

These Ledgers "KA-1.3L" needs to be lifted up 1 star where erection is completed before use.

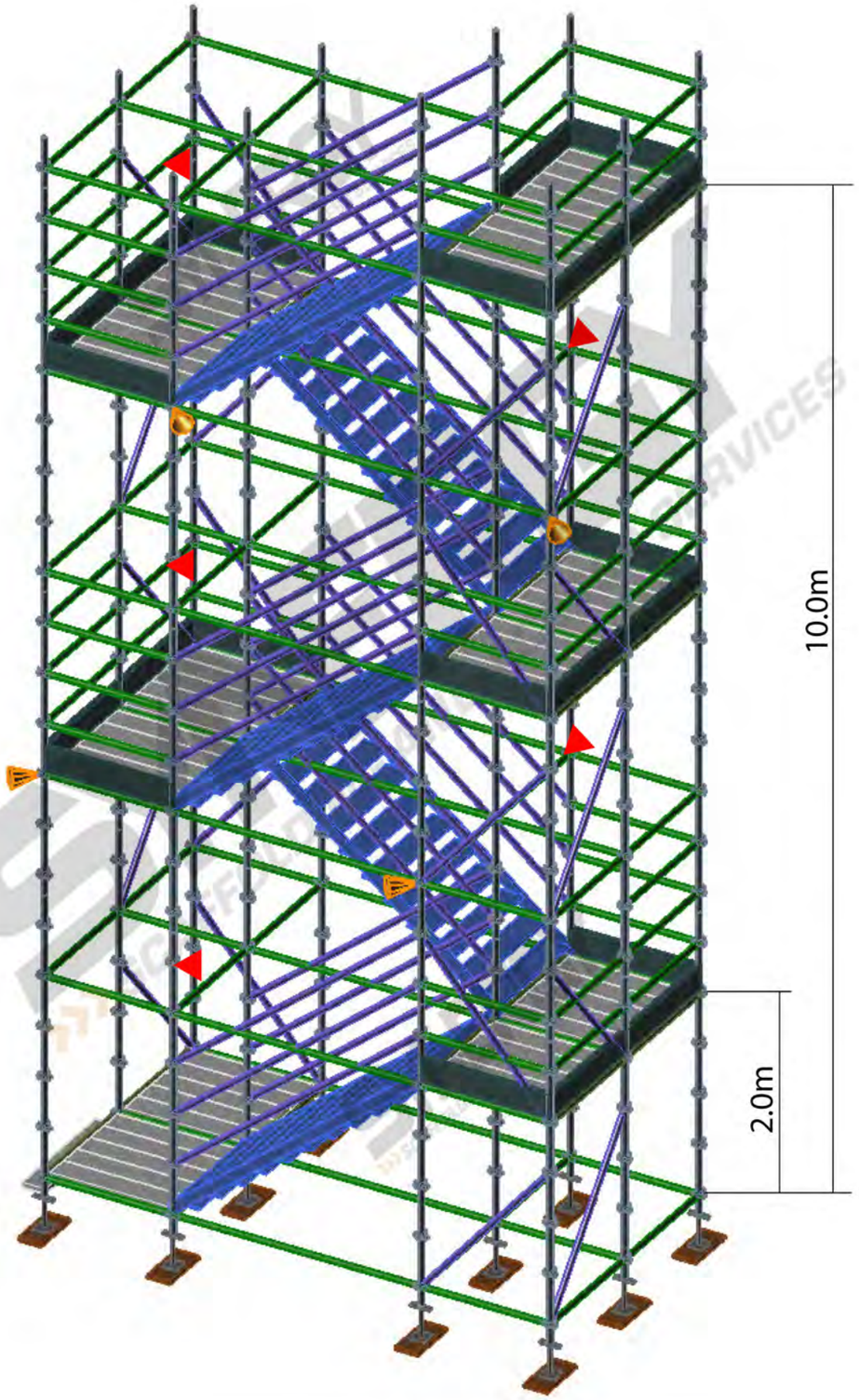

SYNERGY
SCAFFOLDING AND ACCESS SERVICES

ALUMINIUM KWIKALLY

Kwikally 2.0m Stretcher Stair Access Loop Assembly (10.0m High)

KA-STRETCH-LP10.0M

This stretcher stair access can be used for scaffolds ranging from 10.0 - 10.5m

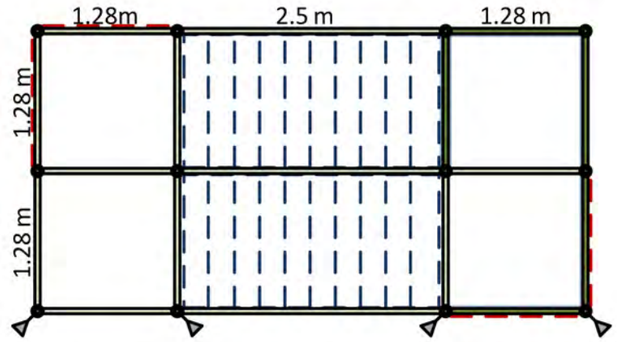

Part No.	Description	Qty
KA-ASS2.0	Stretcher Stair 2.0m	10
KA-2.0DB	Diagonal Brace 2.0m	20
KA-3.2DB	Diagonal Brace 3.2m	30
KA-TBC	Toe Board Clips	26
KA-1.3L	Ledger 1.3m	134
KA-2.5L	Ledger 2.5m	18
TSB-5001.1	Timber Sole Boards	12
KA-1.3x0.6PH	1280*600mm Hatch	24
KA-1.3TB	1280mm Toe Board	21
KA-0.5S	Standard 0.5m	10
KA-1.0S	Standard 1.0m	6
KA-2.0S	Standard 2.0m	4
KA-3.0S	Standard 3.0m	38
SBJ	Solid Base Jack	12
WBR	Wall Bracket	4.0
DC	Doubles (90'z)	4.0
600TUBE	600 Tube	4.0

Total items Weight: 1575kg

These Ledgers "KA-1.3L" needs to be lifted up 1 star where erection is completed before use.

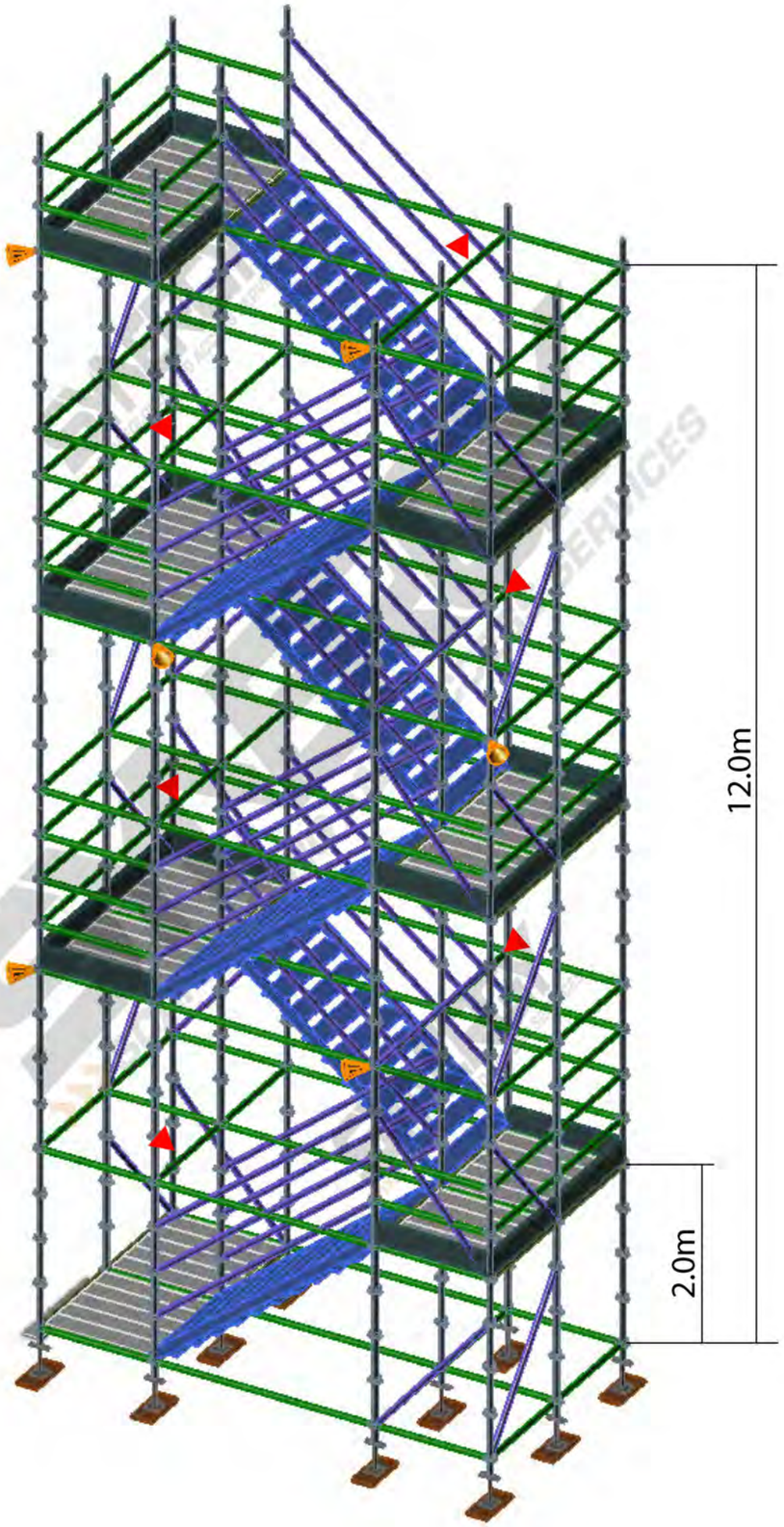

SYNERGY
SCAFFOLDING AND ACCESS SERVICES

ALUMINIUM KWIKALLY

Kwikally 2.0m Stretcher Stair Access Loop Assembly (12.0m High)

KA-STRETCH-LP12.0M

This stretcher stair access can be used for scaffolds ranging from 12.0 - 12.5m

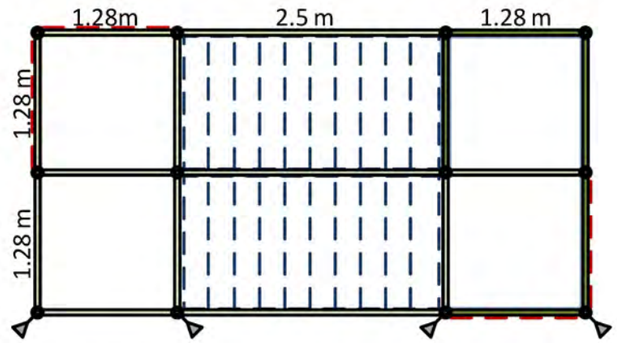

Part No.	Description	Qty
KA-ASS2.0	Stretcher Stair 2.0m	12
KA-2.0DB	Diagonal Brace 2.0m	24
KA-3.2DB	Diagonal Brace 3.2m	36
KA-TBC	Toe Board Clips	31
KA-1.3L	Ledger 1.3m	158
KA-2.5L	Ledger 2.5m	21
TSB-5001.1	Timber Sole Boards	12
KA-1.3x0.6PH	1280*600mm Hatch	28
KA-1.3TB	1280mm Toe Board	25
KA-0.5S	Standard 0.5m	10
KA-1.0S	Standard 1.0m	4
KA-2.0S	Standard 2.0m	2
KA-3.0S	Standard 3.0m	48
SBJ	Solid Base Jack	12
WBR	Wall Bracket	6.0
DC	Doubles (90'z)	6.0
600TUBE	600 Tube	6.0

Total items Weight: 1845kg

These Ledgers "KA-1.3L" needs to be lifted up 1 star where erection is completed before use.

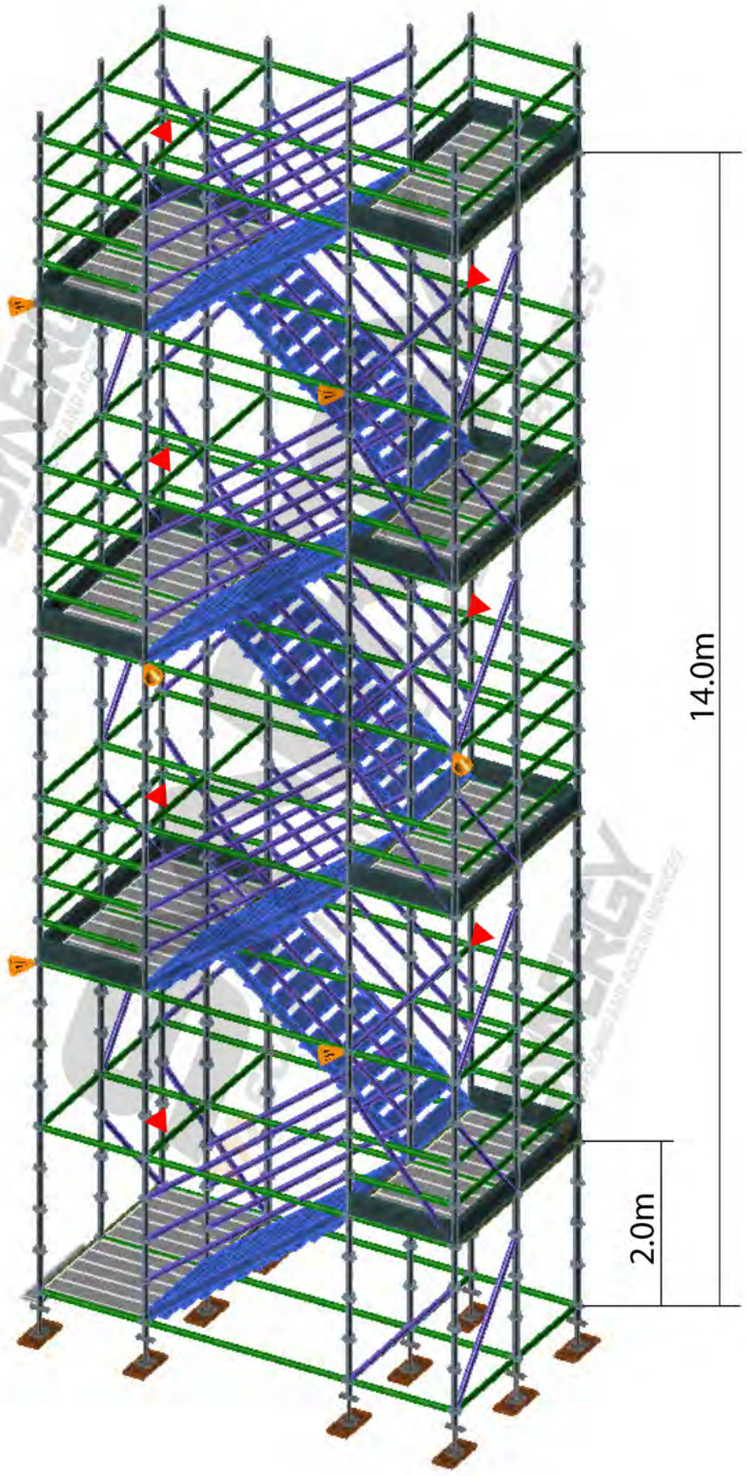

SYNERGY
SCAFFOLDING AND ACCESS SERVICES

ALUMINIUM KWIKALLY

Kwikally 2.0m Stretcher Stair Access Loop Assembly (14.0m High)

KA-STRETCH-LP14.0M

This stretcher stair access can be used for scaffolds ranging from 14.0 - 14.5m

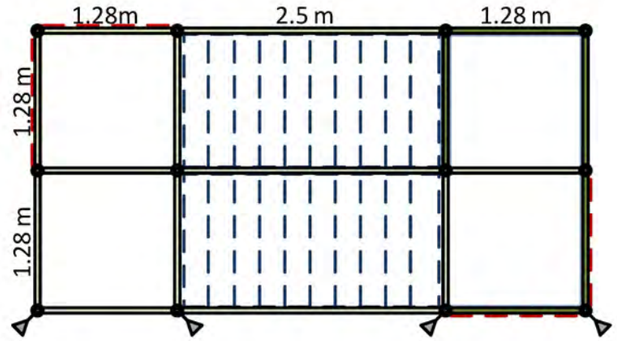

Part No.	Description	Qty
KA-ASS2.0	Stretcher Stair 2.0m	14
KA-2.0DB	Diagonal Brace 2.0m	28
KA-3.2DB	Diagonal Brace 3.2m	42
KA-TBC	Toe Board Clips	36
KA-1.3L	Ledger 1.3m	182
KA-2.5L	Ledger 2.5m	24
TSB-5001.1	Timber Sole Boards	12
KA-1.3x0.6PH	1280*600mm Hatch	32
KA-1.3TB	1280mm Toe Board	29
KA-0.5S	Standard 0.5m	10
KA-1.0S	Standard 1.0m	2
KA-2.0S	Standard 2.0m	6
KA-3.0S	Standard 3.0m	54
SBJ	Solid Base Jack	12
WBR	Wall Bracket	6.0
DC	Doubles (90'z)	6.0
600TUBE	600 Tube	6.0

Total items Weight: 2110kg

These Ledgers "KA-1.3L" needs to be lifted up 1 star where erection is completed before use.

KA-STRETCH-LP16.0M

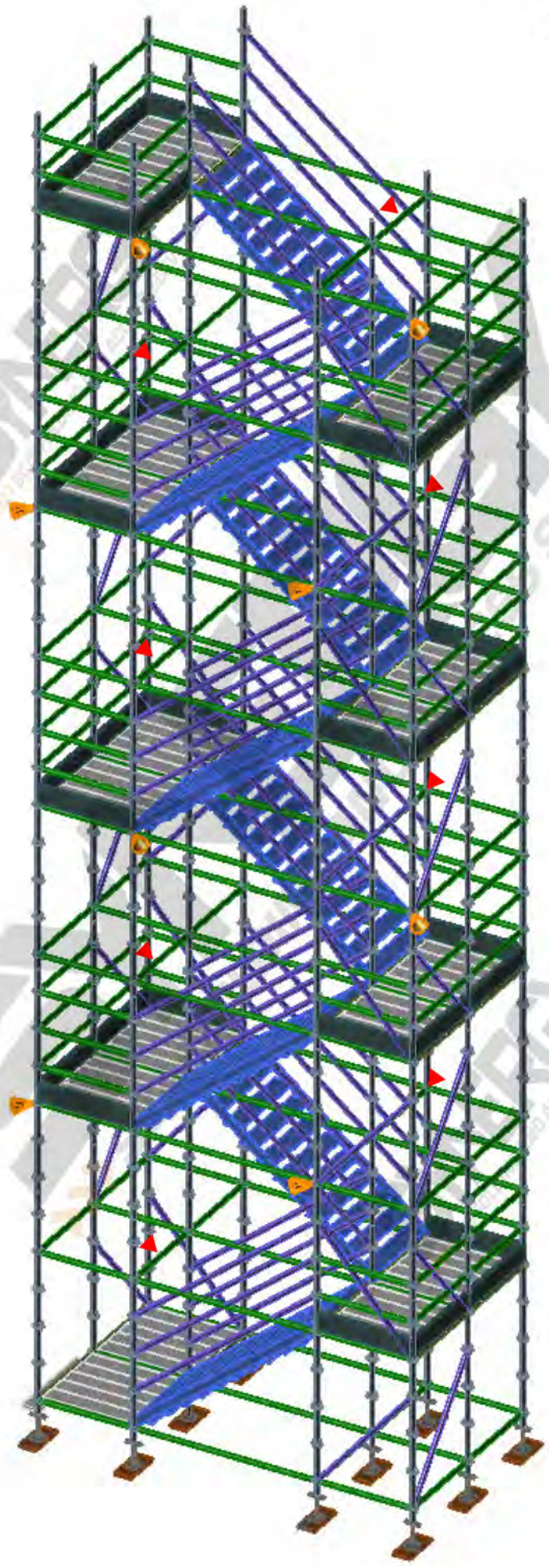

SYNERGY
SCAFFOLDING AND ACCESS SERVICES

ALUMINIUM KWIKALLY

Kwikally 2.0m Stretcher Stair Access Loop Assembly (16.0m High)

KA-STRETCH-LP16.0M

This stretcher stair access can be used for scaffolds ranging from 1.0 - 14.5m

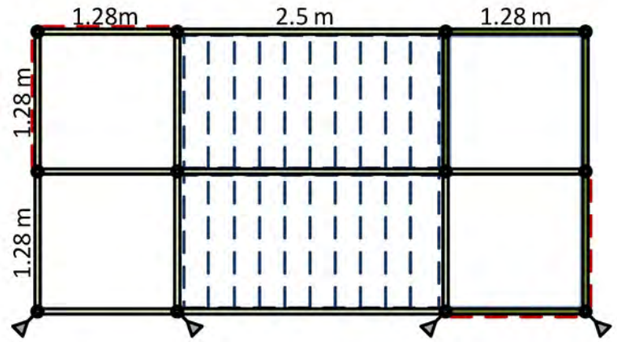

Part No.	Description	Qty
KA-ASS2.0	Stretcher Stair 2.0m	16
KA-2.0DB	Diagonal Brace 2.0m	32
KA-3.2DB	Diagonal Brace 3.2m	48
KA-TBC	Toe Board Clips	41
KA-1.3L	Ledger 1.3m	206
KA-2.5L	Ledger 2.5m	27
TSB-5001.1	Timber Sole Boards	12
KA-1.3x0.6PH	1280*600mm Hatch	36
KA-1.3TB	1280mm Toe Board	33
KA-0.5S	Standard 0.5m	10
KA-1.0S	Standard 1.0m	6
KA-2.0S	Standard 2.0m	4
KA-3.0S	Standard 3.0m	62
SBJ	Solid Base Jack	12
WBR	Wall Bracket	8.0
DC	Doubles (90'z)	8.0
600TUBE	600 Tube	8.0

Total items Weight: 2380kg

These Ledgers "KA-1.3L" needs to be lifted up 1 star where erection is completed before use.

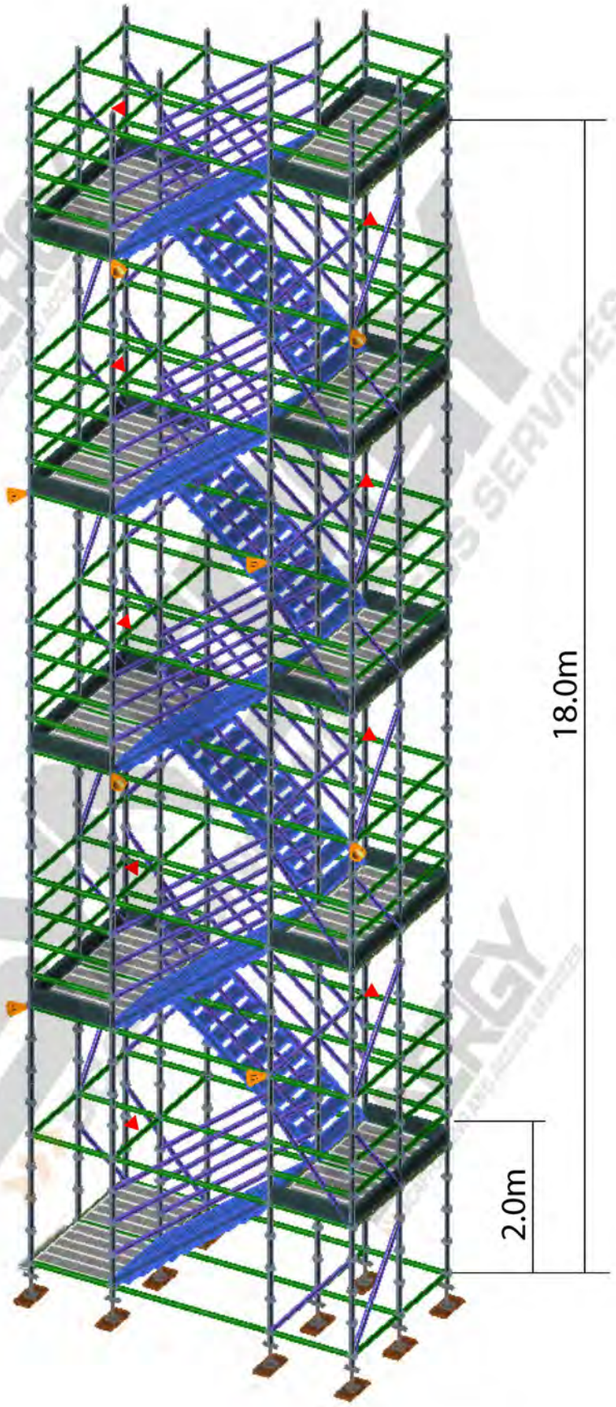

SYNERGY
SCAFFOLDING AND ACCESS SERVICES

ALUMINIUM KWIKALLY

Kwikally 2.0m Stretcher Stair Access Loop Assembly (18.0m High)

KA-STRETCH-LP18.0M

This stretcher stair access can be used for scaffolds ranging from 18.0 - 18.5m

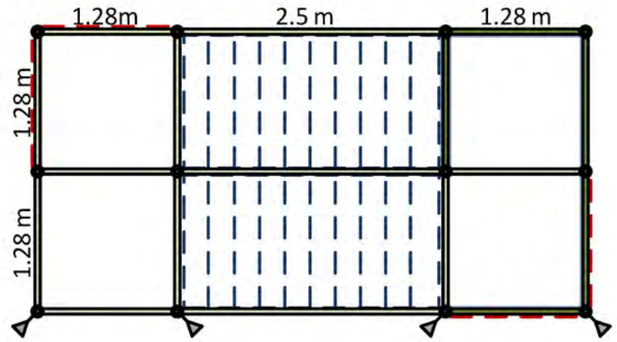

Part No.	Description	Qty
KA-ASS2.0	Stretcher Stair 2.0m	18
KA-2.0DB	Diagonal Brace 2.0m	36
KA-3.2DB	Diagonal Brace 3.2m	54
KA-TBC	Toe Board Clips	46
KA-1.3L	Ledger 1.3m	230
KA-2.5L	Ledger 2.5m	30
TSB-5001.1	Timber Sole Boards	12
KA-1.3x0.6PH	1280*600mm Hatch	40
KA-1.3TB	1280mm Toe Board	37
KA-0.5S	Standard 0.5m	10
KA-1.0S	Standard 1.0m	4
KA-2.0S	Standard 2.0m	2
KA-3.0S	Standard 3.0m	72
SBJ	Solid Base Jack	12
WBR	Wall Bracket	8.0
DC	Doubles (90'z)	8.0
600TUBE	600 Tube	8.0

Total items Weight: 2640kg

These Ledgers "KA-1.3L" needs to be lifted up 1 star where erection is completed before use.

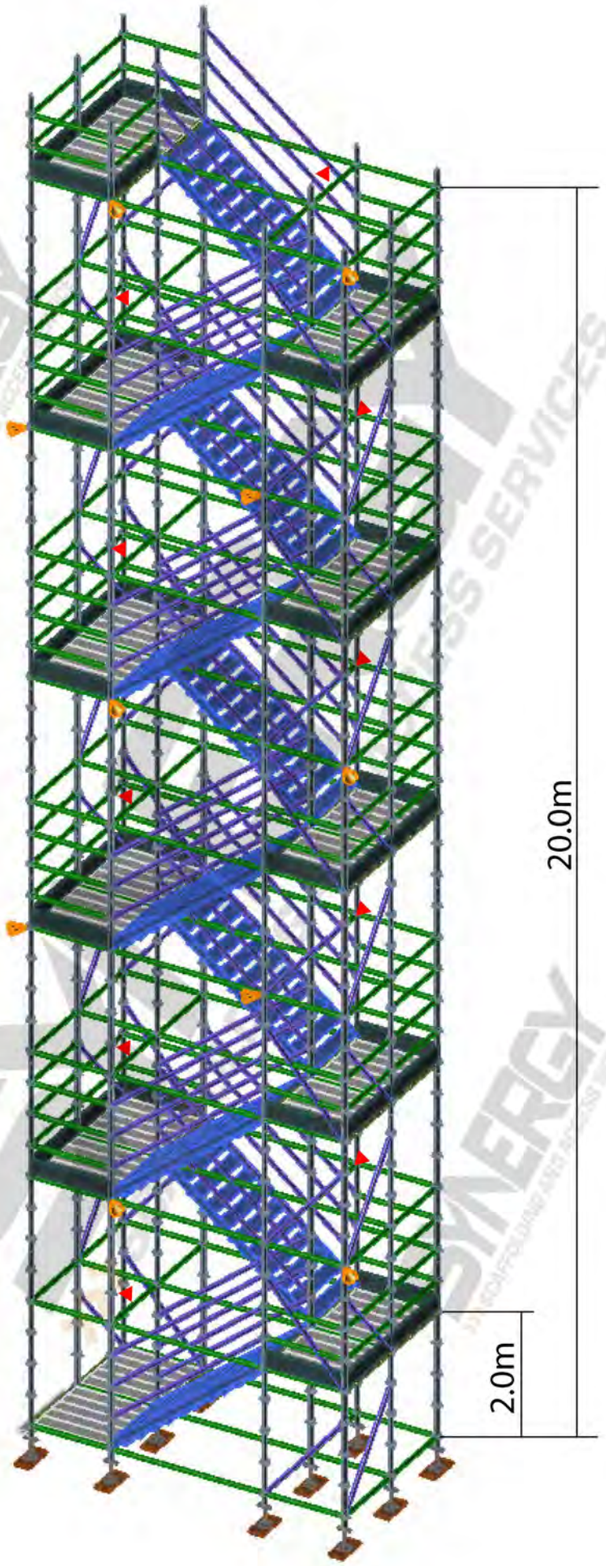

SYNERGY
SCAFFOLDING AND ACCESS SERVICES

ALUMINIUM KWIKALLY

Kwikally 2.0m Stretcher Stair Access Loop Assembly (20.0m High)

KA-STRETCH-LP20.0M

This stretcher stair access can be used for scaffolds ranging from 20.0 - 20.5m

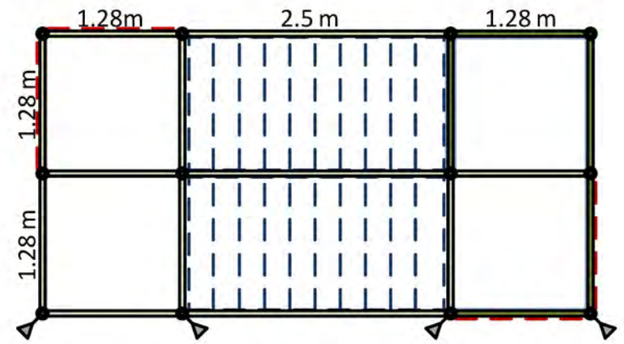

Part No.	Description	Qty
KA-ASS2.0	Stretcher Stair 2.0m	20
KA-2.0DB	Diagonal Brace 2.0m	40
KA-3.2DB	Diagonal Brace 3.2m	60
KA-TBC	Toe Board Clips	51
KA-1.3L	Ledger 1.3m	254
KA-2.5L	Ledger 2.5m	33
TSB-5001.1	Timber Sole Boards	12
KA-1.3x0.6PH	1280*600mm Hatch	44
KA-1.3TB	1280mm Toe Board	41
KA-0.5S	Standard 0.5m	10
KA-1.0S	Standard 1.0m	2
KA-2.0S	Standard 2.0m	6
KA-3.0S	Standard 3.0m	78
SBJ	Solid Base Jack	12
WBR	Wall Bracket	10.0
DC	Doubles (90'z)	10.0
600TUBE	600 Tube	10.0

Total items Weight: 2910kg